Martens
Member of GHM GROUP

Operating Manual

EN

Temperature Measuring Transducer

TC125

Members of GHM GROUP:
GREISINGER
HONSBERG
Martens
IMTRON
DeltaOHM
VAL.CO

Table of contents

1 Intended use (areas of application)

Refer to the chapter *2 Product description* for detailed specifications for the area of application. The operational safety of the device is only assured when used as intended in accordance with the specifications in the operating manual. Intervention beyond the actions described in the operating manual may only be carried out by personnel authorised by the manufacturer for safety and warranty reasons.
Conversions or modifications made on one's own authority are expressly prohibited.

Application-specific dangers can emanate from this device when used improperly or not as intended. The device is not suitable for use in explosion-prone areas.

Danger

Only the device versions TC125L-Ex and TC125LP -Ex are approved for use as associated equipment for connecting intrinsically safe sensors, mounted in zones 0 or 1, or 20 or 21.
The safety-related characteristics must be observed.

Danger

All intrinsically safe equipment lose their approval if they were previously connected to non-intrinsically safe circuits, because compliance with the safety-related characteristics does not have to be 100% guaranteed there.
For this reason, a safety test must be carried out by the manufacturer before it can be used later as intrinsically safe equipment.

Danger

TC125L and TC125LP may be installed in accordance with type of protection " ec " as well as all versions of the TC **** - Ex series in accordance with type of protection " ic " in Zone 2 at risk of explosion under the following operating conditions:

- Installation in a grounded, conductive housing (control cabinet) with a degree of protection of at least IP54 in Compliance with EN60079-0.
- In the interior of the housing (cabinet) must not exceed the contamination level 2, according to IEC60991-1.

Standard basis: EN 60079-0 and EN 60079-7.

General safety instructions, use
This operating manual must be kept in a location such that qualified personnel can refer to it at all times. Any processes described in this operating manual may only be carried out by trained, qualified personnel who are authorised by the owner and wearing protective clothing.

1.1 Safety signs and symbols

Warning notices are identified in this document as described under *Table 1*:

Danger	Warning! This symbol warns of imminent danger which can result in death, severe bodily injury, or severe property damage in case of non-observance.
	Attention! This symbol warns of potential dangers or harmful situations which can cause damage to the device or to the environment in case of non-observance.
	Note! This symbol indicates processes which can have a direct influence on operation or can trigger an unforeseen reaction in case of non-observance.
	Warning! In front of an area in which explosive atmospheres can occur. This only applies to devices with an ATEX approval.

Table 1 Safety sings and symbols

1.2 Safety instructions

Danger

Read the product description before commissioning the device. Ensure that there are no limitations for use of the product for the relevant applications. The owner is responsible for ensuring the fault-free operation of the device. The owner is obligated to ensure compliance and to observe the required work and safety measures of the current applicable regulations for the entire duration of use

1.3 Product liability and warranty

Exclusion of liability:

The contents of the operating manual have been checked to ensure conformity with the described device. However, deviations cannot be entirely ruled out. Therefore, we cannot assume any guarantee for complete conformity. The specifications in this document are checked regularly and any necessary corrections are incorporated into subsequent versions. This document is subject to technical changes. In addition, all claims are based on the valid 'Standard Terms for the Supply of Products and Services of the Electrical Industry'

GHM Messtechnik cannot inspect or repair any devices without the required form having been filled in completely *(see 11.2 Repairs processing*).

1.4 Standards and directives

Conformities

Low-voltage Directive	2014/35/EU
Testing standard	EN 61010-1:2020
EMC Directive	2014/30/EU
Testing standards	EN 61326-1:2013
	EN 61326-3-2:2018
ATEX Directive	2014/34/EU
Testing standards	EN 60079-0:2018
	EN 60079-11:2012
	EN 60079-7:2015

2 Product description

The TC125 temperature transducers convert temperature-dependent resistances (Pt100 / Pt1000) and thermocouples (J, K, S) into standard signals (0/4… 20 mA or 0/2… 10 V).
Applications with signals from the Ex area or requirements with higher interference immunity require galvanic isolation. This is also necessary for temperature sensors with a grounded sensor.
The TC125 has a galvanic 3-way isolation between input, output and auxiliary voltage. For PT100, Pt1000 and thermocouples, 8 preconfigured measuring ranges are available, which can be adjusted with rotary potentiometers with regard to zero point and span.
When using thermocouples, internal temperature compensation can be activated or deactivated by measuring the terminal temperature. An intrinsically safe input enables connection to devices from the Ex area (Zone 0).

2.1 Scope of Delivery

- TC125, according to ordering code
- Power Rail DIN rail adapter (available for LP version, only)
- This operating manual and any other documents.

2.2 Principle of operation

Depending on the selected measuring range, an analogue actual value output is controlled with 0 / 4..20mA or 0/2… 20V. The temperature measuring ranges are linearized. The device is configured using DIP switches. In the TC125M device version, the auxiliary voltage supply can be provided either via an internal wide-range power supply unit (20..125V DC / 85..250V AC) or in the TC125L / TC125LP device version via a DC power supply unit with 24V DC. In the case of the DC power supply unit, the auxiliary voltage can be fed in via the plug-in device terminals or alternatively via a mounting rail bus (PowerRail) on the device, depending on the device type.
Current and voltage outputs are brought out to separate terminals and can also be used in parallel.
The zero point and end value of the outputs can be corrected using the trim potentiometer on the front.

Measuring ranges

Temperature Sensor	Factory measuring range	Detection area*)
Pt100	-50 .. 50 °C	-70 .. 55°C
	0 .. 50 °C	-70 .. 55°C
	0 .. 100 °C	-70 .. 105°C
	0 .. 150 °C	-70 .. 310°C
	0 .. 200 °C	-70 .. 310°C
	0 .. 300 °C	-70 .. 310°C
	0 .. 500 °C	-70 .. 870°C
	0 .. 850 °C	-70 .. 870°C
Pt1000	-50 .. 50 °C	-70 .. 55 °C
	-30 .. 70 °C	-70 .. 105 °C
	-20 .. 40°C	-70 .. 55 °C
	0 .. 50 °C	-70 .. 55 °C
	0 .. 100 °C	-70 .. 105 °C
	0 .. 150 °C	-70 .. 260 °C
	0 .. 200 °C	-70 .. 260 °C
	0 .. 250°C	-70 .. 260 °C
Thermocouple	FeCuNi 0..250 °C	-70 .. 360 °C
	FeCuNi 0..500 °C	-70.. 650 °C
	NiCrNi -50..250 °C	-100 .. 420 °C
	NiCrNi 0..500 °C	-100 .. 650 °C
	NiCrNi 0..750 °C	-100 . 1250 °C
	NiCrNi 0..1000 °C	-100 . 1250 °C
	NiCrNi 0..1250 °C	-100 . 1250 °C
	PtRhPt 0..1500 °C	0 .. 1800 °C

Table 2 Measuring ranges

*) The zero point and the end value can be adjusted within the respective detection area.

2.3 Customer specific measuring ranges

One or more special measuring areas can also be ordered within the respective detection areas. The measuring accuracy is then reduced by the factor of the detection measuring range span / custom measuring range span. The custom measuring range span must be at least 30% of the detection measuring range span.
Custom measuring ranges are adjusted directly in the device microprocessor, i.e. the setting range of the trim potentiometer does not change as a result.

2.4 Block diagram

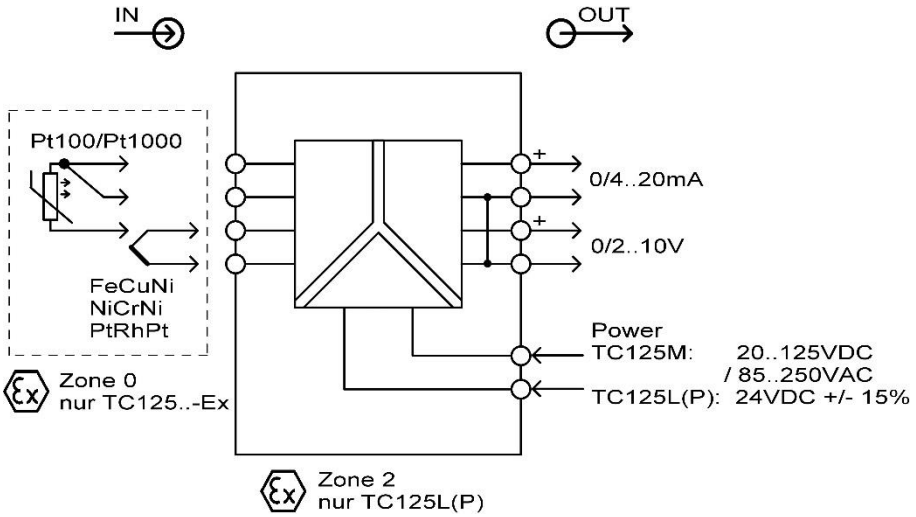

Figure 1 Block diagram

2.5 Type Label

The type plate contains the most important identification data:

- Connection diagram
- Distributor
- Type and article description
- Ex marking
- Technical specifications
- Serial number / barcode
-

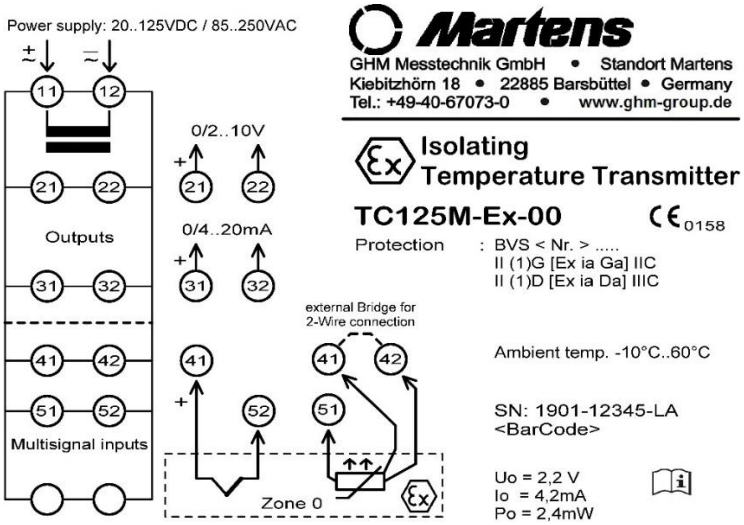

Figure 2 Type Plate

2.6 Power Rail

The supply of multiple devices can be combined and simplified via a bus system in the carrier rail (TS35).
A corresponding version is available for the entire LP series of GHM carrier rail devices in a housing with 12.5 mm width.
A bus adapter compatible with series connection is clamped on the carrier rail before installation of the device to be supplied with power.
An adapter is required for each device. The bus power supply is provided via a plug-type terminal strip.
The power supply terminals 11 and 12 on the upper device side are omitted in device version TC125LP designed for this purpose.

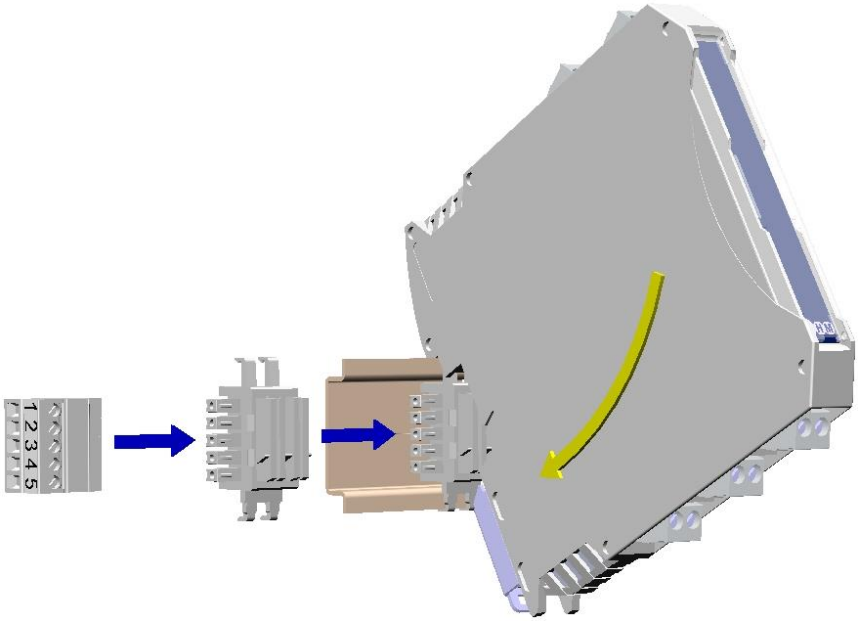

Figure 3 Example: TC125LP with DIN rail connector and supply terminal PRVK (optional accessories)

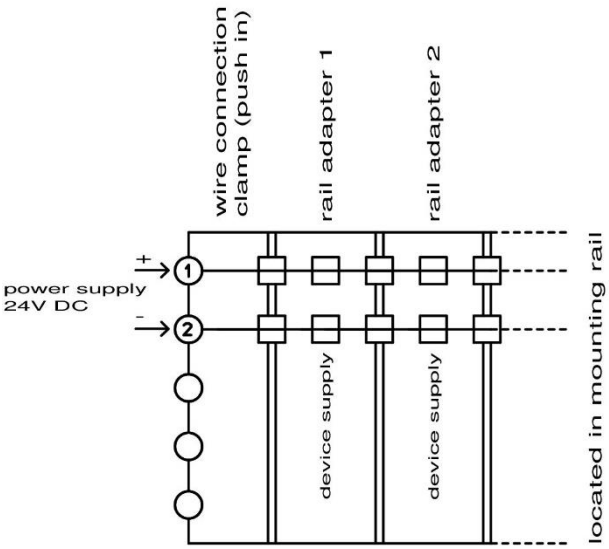

Figure 4 Terminal Assignment PRVK

3 Assembly and installation

3.1 Mechanical assembly

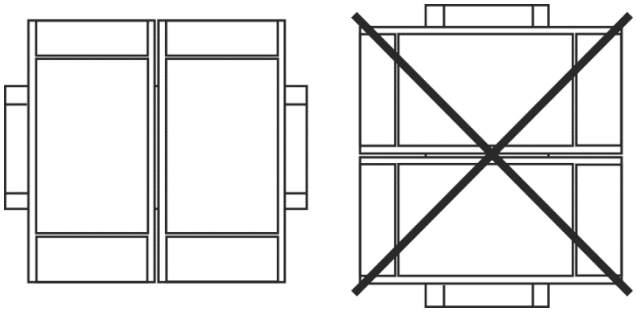

Figure 5 DIN rail mounting TS35, EN 60715

The installation of multiple devices without spacing is only permitted with a horizontally mounted DIN rail.
The devices may be installed in Ex-area Zone 2 within an earthed, conductive housing (control cabinet) with degree of protection IP54.

3.2 Electrical Installation

Danger

The device may only be installed by a qualified electrician. The national and international regulations for the installation of electrical systems of the respective operator country apply.
Power supply according to EN 60664-1.

- The auxiliary voltage is connected to connections 11 and 12 of the plug-in terminal strip.
- Resistance sensors are connected via terminals 41, 42 and 51 (3-wire connection). A bridge 41, 42 must be provided when using temperature sensors with 2 connection lines.
- Thermocouples are applied to terminals 41 (+) and 52.
- The active current output is brought out to terminals 31 (+) and 32.
- The active voltage output is at terminals 21 (+) and 22.
- There are 6 DIP switches on the front panel for configuring the input measuring, the output range and for deactivating the internal temperature compensation.
- Using the two potentiometers on the front, the start value and the end value of the measuring range can be adjusted.

Electrical Connections

Terminal	**Assignment**	
11	Supply voltage ~/+	
12	Supply voltage ~/-	
21	Analogue output +, 0/2…10 V	
22	Analogue output - , 0/2…10 V	
31	Analogue output +, 0/4…20 mA	
32	Analogue output - , 0/4…20 mA	
	PT100 / PT1000	**Thermocouple J /K /S**
41	Red	+ Black / Green / Orange
42	Red	-
51	White	-
52	-	- White / White / White

Table 3 Electrical Connections

4 Connection Diagram

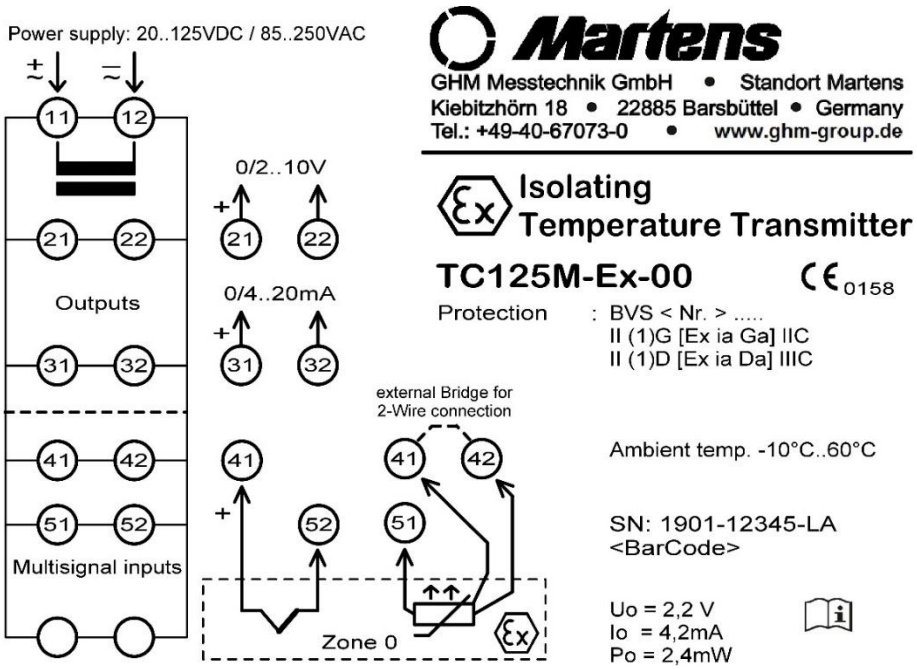

Figure 6 Connection Diagram

5 Operating steps, functional description, output

5.1 Control elements, functional description

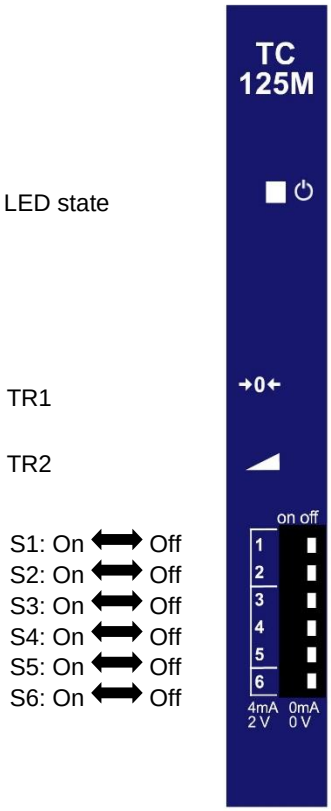

Figure 7 Control Elements

LED state	Description
	Greed LED lighted: Device ready for use
	Red LED flashing: Break of sensor, or short circuit
	Green LED flashingt: Underrange or overrange of the analog outputs <0mA, <0V or> 21.4 mA,> 10.6V
	Red LED lighted: Device starting up or device failure

Table 4 Signalling (see chapter 7 Error and System Messages)

Trimmer	Adjustment	
TR1	Zero point, Start-Value	
TR2	End-Value	
DIP-Switch		
Input configuration		
S1 – S5	See **DIP-Switch Configuration**	
Output configurations (living zero point)		
S6	**On**	**Off**
	4…20 mA / 2…10	0…20 mA / 0…10 V

Table 5 Control Elements, DIP-Switches

DIP-Switch Configuration

Pt100 [°C]:

Switch	-50...50	0...50	0...100	0...150	0...200	0...300	0...500	0...850
1	ON	ON	ON	ON	ON	ON	ON	ON
2	OFF	OFF	OFF	OFF	OFF	OFF	OFF	OFF
3	OFF	ON	OFF	ON	OFF	ON	OFF	ON
4	OFF	OFF	ON	ON	OFF	OFF	ON	ON
5	OFF	OFF	OFF	OFF	ON	ON	ON	ON

Table 6 Pt100 configuration

Pt1000 [°C]:

Switch	-50...50	-30...70	-20...40	0...50	0...100	0...150	0...200	0...250
1	OFF	OFF	OFF	OFF	OFF	OFF	OFF	OFF
2	ON	ON	ON	ON	ON	ON	ON	ON
3	OFF	ON	OFF	ON	OFF	ON	OFF	ON
4	OFF	OFF	ON	ON	OFF	OFF	ON	ON
5	OFF	OFF	OFF	OFF	ON	ON	ON	ON

Table 7 Pt1000 configuration

Thermocouple with temperature compensation (CJC) [°C]:

	FeCuNi (J)		NiCrNi (K)					PtRhPt (S)
Switch	0...250	0...500	-50...250	0...500	0...750	0...1000	0...1250	0...1500
1	OFF	OFF	OFF	OFF	OFF	OFF	OFF	OFF
2	OFF	OFF	OFF	OFF	OFF	OFF	OFF	OFF
3	OFF	ON	OFF	ON	OFF	ON	OFF	ON
4	OFF	OFF	ON	ON	OFF	OFF	ON	ON
5	OFF	OFF	OFF	OFF	ON	ON	ON	ON

Table 8 Thermocouple configuration with CJC

Thermocouple without temperature compensation (CJC) [°C]:

	FeCuNi (J)		NiCrNi (K)					PtRhPt (S)
Switch	0...250	0...500	-50...250	0...500	0...750	0...1000	0...1250	0...1500
1	ON	ON	ON	ON	ON	ON	ON	ON
2	ON	ON	ON	ON	ON	ON	ON	ON
3	OFF	ON	OFF	ON	OFF	ON	OFF	ON
4	OFF	OFF	ON	ON	OFF	OFF	ON	ON
5	OFF	OFF	OFF	OFF	ON	ON	ON	ON

Table 9 Thermocouple configuration without CJC

5.2 Trim-Potentiometer

Via the 12-turn trim potentiometer, the measuring span and zero point can be adjusted

◢	Measuring span (End-Value) adjustable +/-15% If the measuring span is reduced, the measuring accuracy may decrease.
→0←	Zero point (Start-Value), adjustable *) +/- 8 Ohm with Pt100 and +/-80 Ohm with Pt1000 (appx. +/-20°C) +/- 10% of factory set end value with thermocouples

*) The set zero point must be within the detection range (see *Table 2 Measuring ranges*)

Danger

The trim potentiometers can be used during operation.
Snap points are defined in the middle of the potentiometer setting range:
If the output value does not change during a ½ turn of the potentiometer, then the factory settings are set.
The zero point change in Pt100 / Pt1000 measuring ranges is primarily used to compensate for line resistances, e.g. with 2-wire connection. It is therefore used before linearization.
The change in measuring span takes effect after the linearization.
With thermocouples, both the change in the zero point and the change in the measuring span act on the linearized measured value.
The adjustment range can vary slightly for manufacturing reasons.
Note that functions of downstream assemblies (e.g. control, limit value processing, registration, etc.) can be influenced directly.

5.3 Output Configuration

The output signal is set via DIP switch 6 between 0..20mA / 0..10V and 4..20mA /2..10V.

5.4 Break of Sensor and Short Circuit

In the measuring ranges for Pt100 and Pt1000 sensors, there is also monitoring for sensor breaks and short circuits.
With thermocouples there is only monitoring for sensor breakage.

Behaviour with standard devices
In the event of an error, the analogue outputs go to 0mA, 0V.

Behaviour of devices with option 02
In the event of an error, the analogue outputs go to a maximum of > 21mA,> 10.5V

6 Commissioning, Maintenance and Service

6.1 Installation

1. Make sure that the connection assignment has been carried out according to the connection diagram and that the auxiliary voltage corresponds.
2. When connecting equipment from potentially explosive areas, make sure that the device version has the appropriate approval.
3. When installing the isolation amplifier in Zone 2, the device must be installed in a control cabinet with degree of protection IP54.
4. Make sure that the clamps are screwed tight.
5. Check the correct configuration after switching on the power supply

After applying the auxiliary voltage, the device function is checked.

The device is ready for use after appx. 5 seconds.

6.2 Maintenance

Housing

When used as intended, no cleaning or maintenance is required.

6.3 Service

Service of the device is only possible in the factory.

7 Error and System Messages

Error	**Root Cause**	**Elimination**
LED not lighted	Auxiliary voltage not connected or too small or device defective	Check connection or Have the device checked at the factory
LED green lighted	Device ready for use	
LED red flashing	Break of sensor or Sensor short circuit	Check connection and measuring range setting Standard: outputs 0mA, 0V Option 02: outputs > 21mA, > 10.5V
LED green flashing	The measured temperature combined with the setting of the trimming potentiometer overrides or underrides the analog outputs	Change measuring range or Keep the measuring temperature within the selected measuring range and / or set the trimming potentiometer so that the conversion of the measuring temperature to the analog outputs always results in a result in the range 0. .21.4mA or 0 .. 10.6V supplies
LED red lighted	After switching on for appx. 5 seconds. Outputs 0mA, 0V	If the red light stays on, the device must be checked in the factory.
Current or voltage output does not work correctly	- Incorrect measuring range setting - With 2-wire connection PT100 / Pt1000 - Output overloaded - Device defective	- check measuring range settings - Set a bridge, terminals 41 – 42 - Check output connection - Have the device checked in the factory

Table 10 Error and System Messages

8 Technical Data

Supply Voltage		
Supply Voltage TC125L / TC125LP TC125M	 24V DC +/-15% 20…125 V DC or 85…250 V AC (47…63Hz)	
Power consumption Wide.range power supply TC125M DC and Power Rail, TC125L / TC125LP	 < 1,5W, < 3VA < 1,5W	
Combined Data		
Rated Voltage Um With Ex-ia operation	250V AC (in accordance with EN61010-1; Degree of contamination2, overvoltage category II, reinforced insulation) 250V AC / 125V DC (- „ -) (in accordance with EN60079-11)	
Test Voltage	3kV AC between power supply / Input / Output	
Working Temperature	-10…+60°C	
Storage Temperature	-20…+80°C	
Air Humidity	10…90% (no condensation)	
CE-Conformity		
2014/35/EU Low-Voltage 2014/30/EU EMC 2011/65/EU RoHs 2014/34/EU ATEX	EN 61010-1:2020 EN 60664-1:2007 EN 61326-1:2013 EN IEC 63000 :2018 EN 60079-0:2018 EN 60079-11 :2012 EN 60079-7 :2015	
Explosion protection intrinsically safe inputs zone 0/1		
Marking TC125L-Ex / TC125LP-Ex / TC125M-Ex Certifcate BVS 20 ATEX E 064 TC125L-Ex / TC125LP-Ex Manufacturer Certificate	 **Gas :** II (1) G [Ex ia Ga] IIC **Dust :** II (1) D [Ex ia Da] IIIC **Protection type „ic“** II 3 G Ex ec [ic] IIB T4 Gc For installation in Zone 2, see conditions of use: *1 Intended use (areas of application)*	
Explosion protection without intrinsically safe inputs		
Marking TC125L-00 / TC125LP-00	 **Protection type „ec“** II 3 G Ex ec IIB T4 Gc For installation in Zone 2, see conditions of use: *1 Intended use (areas of application)*	
Measuring Inputs		
ATEX – Limit Values (valid between all intrinsically safe terminals 41..52, acc. connection diagram)	Uo = 2,2V; Io = 4,2mA; Po = 2,4mW Ci = 33nF;Li ≈ 0mH Co = 10,9uF with Lo= 50mH (Zone 0, protection type ia)	
Resistance thermometer		
	Pt100	**Pt1000**
Detection range (see measuring ranges) Measuring current	-70...+850°C ca. 1 mA	-70…+260°C ca. 100 µA
Circuit type	3-wire compensation (2-wire circuit via bridge)	
Line resistance	Max. 100 Ohm (direct grinding in of safety barriers possible)	

Compensation error with 3-wire circuit Pt100 0..50°C 0..100°C 0..>200°C Pt1000	 < 0,008% / Ohm line resistance < 0,004% / Ohm line resistance < 0,002% / Ohm line resistance 0,002% / Ohm line resistance		
(Requirement symmetrical resistance of the lines and terminals)			
Thermocouple			
Type Detection range (see measuring ranges)	J, Fe-CuNi -70..+900 °C	K, NiCr-Ni -100..+1250 °C	S, PtRh-Pt90/10 0..1800°C
Internal cold junction compensation	Yes, can be deactivated		
Analog outputs (simultaneous operation of the voltage and current output possible)			
Voltage	0/2…10V DC, selectable, load < 5mA, short circuit proof		
Current	0/4…20mA DC, selectable, burden < 600Ohm		
Trim potentiometer			
Design Zero Point adjustment ***)** - Pt100 - Pt1000 - Thermocouple End-Value adjustment ***)** - All Sensors	2 x 12-turn trimming potentiometer, on the front appx. +/- 8 Ohm (ca. +/-20°C) appx. +/-80 Ohm (ca. +/-20°C) appx. +/-10%, based on factory end value appx. +/-15%, based on factory end value		
Monitoring functions			
Sensor break monitoring	Yes		
Short circuit monitoring	Yes (Pt100 and Pt1000, only)		
Behaviour in the event of an error	Outputs: Standard 0mA, 0V / Option 02: >21 mA, >10,5V		
Accuracy **)			
Standard error	0,2 %		
Linearity error	0,05 %		
Temperature error	0,01 %/K		
Current / Voltage Output	0,1%		
Transmission path			
Step response T90	< 800 msec		
Casing			
Dimensions (WxDxH)	12,5 x 114 x 108 mm		
Material	PA6.6, light grey, Flammability class V0 (UL94)		
Weight	120 g		
Protection rating	IP20		
Screw Terminals	0,2..2,5 mm², AWG 24..14, removable, coded		
Push-In Terminals (spring-type terminals)	0,5..1,5 mm², AWG 25..16, removable, coded		
Power Rail (TC125LP)	8A over the entire bus system (power supply via removable terminals 0.2..2.5 mm², AWG 24..14)		

*) The evaluable measured values must be within the detection range (see *Table 2 Measuring ranges*).

) **Please note:
The specified accuracy values relate to a line and terminal point connection with theoretically the same resistance using 3-wire technology.
An accuracy deviation of 0.2% in the 0..50 ° C measuring range only corresponds to a change in resistance of 39 * 10-3 Ohm (39 mΩ) at a Pt100 sensor, i.e. the line and connection resistance has a very large influence on the measurement accuracy.
For thermocouples, the accuracy value refers to a measurement without internal comparison point compensation.
With cold junction compensation, the accuracy of the internal temperature sensor of 2K must be included.

8.1 Safety-related key figures FMEDA

TC125M

λ_{SD}	279 FIT
λ_{SU}	197 FIT
λ_{DD}	74 FIT
λ_{DU}	44 FIT
DC	62,8%
SFF	92,6%
PFH	4,39E-8
PFDavg 1 year 5 years 10 years	1,92E-4 9,62E-4 1,92E-3

Table 11 FMEDA TC125M

TC125L

λ_{SD}	248 FIT
λ_{SU}	181 FIT
λ_{DD}	71 FIT
λ_{DU}	43 FIT
DC	62,0%
SFF	92,0%
PFH	4,33E-8
PFDavg 1 year 5 years 10 years	1,90E-4 9,49E-4 1,90E-3

Table 12 FMEDA TC125L

MTBF calculation according to SN29500

8.2 Mechanical design / dimensions

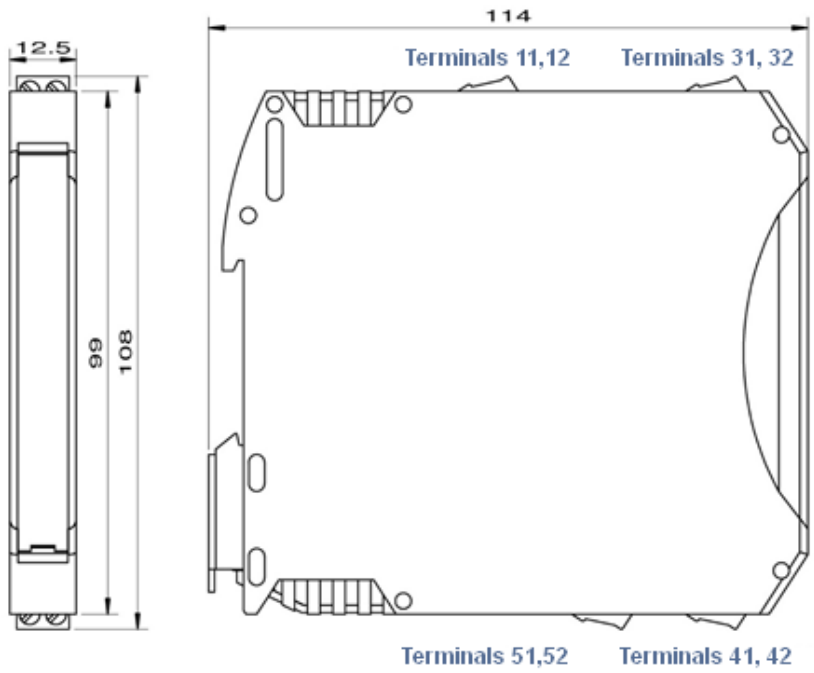

Figure 8 Dimensions

9 Order Code

1. 2. 3.
[ ] - [ ] - [ ]

1.	**Device Version**	
	TC125L	Supply Voltage 24V DC +/- 15%
	TC125LP	Supply Voltage 24V DC +/- 15% Incl. DIN Rail bus connector
	TC125M	Wide-range power supply 20..125VDC / 85..250V AC
2.	**Explosion protection**	
	00*	Installation of the device TC125 in zone 2 allowed, according to ATEX type of protection "ec"
	Ex**	When installing the devices outside of the Ex area: Intrinsically safe inputs according to ATEX type of protection "ia" for zones 0 and 20 The devices TC125L / TC125LP may be installed into Zone 2 according to ATEX type of protection "ic"
3.	**Options**	
	00	No Options
	01	Push-in terminals (plug-in)
	02	Upscaling in the event of a fault: outputs > 21mA,> 10.5V (Standard=downscaling: outputs 0mA, 0V)

*) TC125L / LP-00 may be installed in Zone 2 according to ATEX type of protection "ec". This requires installation in a clean environment in a conductive, earthed housing (control cabinet) with a minimum of IP54 protection. (Conditions of use: *1 Intended use (areas of application)*)

**) Type of protection permitted when installing the devices outside the Ex area. TC125L / LP-Ex may be installed in Zone 2 according to ATEX type of protection "ic".

10 Device transport and storage

Gentle and tension-free packaging of the housing must be ensured for transport (no machine wrapping of the package). The device must be stored in the environmental conditions specified in the technical data

11 Service

11.1 Manufacturer

If you have any questions, please do not hesitate to contact us:

Contact

GHM Messtechnik GmbH
GHM GROUP - Martens
Kiebitzhörn 18
22885 Barsbüttel | GERMANY

11.2 Repairs processing

Defective products are repaired professionally and quickly in our service centre.

Open hours and contact

Monday to Thursday from 8:00 to 16:00
Friday from 8:00 to 13:00

GHM Messtechnik GmbH
GHM GROUP - Martens
Kibitzhörn 18
Service Centre
22885 Barsbüttel | GERMANY
Tel: +49 40 67073-143
service.martens@ghm-messtechnik.de

Fill in the return form available from the information base online at www.ghm-group.de and sent it in with the product.

12 Certificate of Conformity

Martens
Member of GHM GROUP

CE

EU-KONFORMITÄTSERKLÄRUNG
EU-DECLARATION OF CONFORMITY

GHM GROUP - Martens | GHM Messtechnik GmbH | Kiebitzhörn 18 | 22885 Barsbüttel | GERMANY

Dokument-Nr. / Monat.Jahr:
Document-No. / Month.Year: **3118 / 01.2022**

Wir erklären hiermit als Hersteller in alleiniger Verantwortung, dass die folgenden Produkte konform sind mit den Schutzzielen der Richtlinie des Europäischen Parlaments:
We declare as manufacturer herewith under our sole responsibility that the following products are in compliance with the protection requirements defined in the European Council directives:

Produktbezeichnung:
Product identifier: **TC125L-Ex, TC125LP-Ex, TC125M-Ex**

Produktbeschreibung:
Product description: **Temperaturmessumformer**
Temperature transmitter

Die Produkte entsprechen den folgenden Europäischen Richtlinien:
The products conforms to following European Directives:

Richtlinien / *Directives*		Angewandte harmonisierte Normen oder angeführte technische Normen *Applied harmonized standards or mentioned technical specifications*
2014/30/EU	EMV Richtlinie / *EMC Directive*	EN 61326-1: 2013
2014/35/EU	Niederspannungsrichtlinie / *Low Voltage Directive*	EN 61010-1: 2010+A1:2019+A1:2019/AC:2019
2011/65/EU	RoHS / *RoHS*	EN IEC 63000: 2018
2014/34/EU	ATEX-Richtlinie / *ATEX Directive*	EN 60079-0 :2018 EN 60079-7: 2015 EN 60079-11: 2012

EG-Baumusterprüfbescheinigung / ausgestellt von:
EC Type Examination Certificate / issued by: **BVS 20 ATEX E 064** / DEKRA Testing and Certification GmbH (Reg.No. 0158)

Qualitätssicherung / *quality assurance*: DEKRA Testing and Certification GmbH (Reg.No. 0158)

** Die in der zugehörigen EU-Baumusterprüfbescheinigung genannten Normen wurden durch neue Ausgaben ersetzt. Wir erklären für das genannte Produkt auch die Übereinstimmung mit den Anforderungen der neuen Normenausgabe.*
The standards associated to the EU-certificate of conformity have been replaced by new editions. We therefore declare the conformity to the stated product with the requirements of the new issued standards.

Diese Erklärung wird verantwortlich für den Hersteller abgegeben durch:
The manufacturer is responsible for the declaration released by:

Dr. Axel Lamprecht
Geschäftsführer
CEO
Barsbüttel, 07. Januar 2022

Diese Erklärung bescheinigt die Übereinstimmung mit den genannten Harmonisierungsrechtsvorschriften, beinhaltet jedoch keine Zusicherung von Eigenschaften.
This declaration certifies the agreement with the harmonization legislation mentioned, contained however no warranty of characteristics.

Members of GHM GROUP: GREISINGER | HONSBERG | Martens | DeltaOHM | VAL.CO

Martens
Member of GHM GROUP

CE

EU-KONFORMITÄTSERKLÄRUNG
EU-DECLARATION OF CONFORMITY

GHM GROUP - Martens | GHM Messtechnik GmbH | Kiebitzhörn 18 | 22885 Barsbüttel | GERMANY

Dokument-Nr. / Monat.Jahr:
Document-No. / Month.Year: **3119 / 01.2022**

Wir erklären hiermit als Hersteller in alleiniger Verantwortung, dass die folgenden Produkte konform sind mit den Schutzzielen der Richtlinie des Europäischen Parlaments:
We declare as manufacturer herewith under our sole responsibility that the following products are in compliance with the protection requirements defined in the European Council directives:

Produktbezeichnung:
Product identifier: **TC125L-00, TC125LP-00, TC125M-00**

Produktbeschreibung:
Product description: **Temperaturmessumformer**
Temperature transmitter

Die Produkte entsprechen den folgenden Europäischen Richtlinien:
The products conforms to following European Directives:

Richtlinien / *Directives*		Angewandte harmonisierte Normen oder angeführte technische Normen *Applied harmonized standards or mentioned technical specifications*
2014/30/EU	EMV Richtlinie / *EMC Directive*	EN 61326-1: 2013
2014/35/EU	Niederspannungsrichtlinie / *Low Voltage Directive*	EN 61010-1: 2010+A1:2019+A1:2019/AC:2019
2011/65/EU	RoHS / *RoHS*	EN IEC 63000: 2018

Diese Erklärung wird verantwortlich für den Hersteller abgegeben durch:
The manufacturer is responsible for the declaration released by:

Dr. Axel Lamprecht
Geschäftsführer
CEO

Barsbüttel, 07. Januar 2022

Diese Erklärung bescheinigt die Übereinstimmung mit den genannten Harmonisierungsrechtsvorschriften, beinhaltet jedoch keine Zusicherung von Eigenschaften.
This declaration certifies the agreement with the harmonization legislation mentioned, contained however no warranty of characteristics.

Members of GHM GROUP: GREISINGER | HONSBERG | Martens | Deltaohm | VAL.CO